Hydrogen safety retrofit of ASDEX Upgrade pellet centrifuge - explosion prevention on fuelling devices

B. Ploeckl[1], M. Sochor[1], A. Herrmann[1], S. Kilian[2], P.T. Lang[1], V. Rohde[1], F. Stelzer[1], M. Uhlmann[1], ASDEX Upgrade Team
1) Max Planck Institute for Plasma Physics, 85748 Garching, Germany
2) DEKRA Testing and Certification GmbH, 44809 Bochum, Germany

Future fusion reactors will require fuelling by cryogenic pellets made from a mixture of deuterium and tritium. Nowadays fusion experiments are running with protium or deuterium plasmas in order to reduce radiological licensing issues but the hydrogen safety has to be addressed as well.

The ASDEX Upgrade pellet centrifuge is serving for fuelling and ELM pacing experiments since 1991 and was continuously adapted to new tasks. The hydrogen safety was based on a limited hydrogen inventory, preventing the system from explosive atmosphere in case of incidents: loss of vacuum or loss of power.

In order to get the system licensed, both failure scenarios must be considered at once. The actual system did not meet these requirements. Furthermore, part of the present equipment was not licensed to be operated in hazardous zones according to ATEX regulations. Many of these components could not be replaced by classified ones, in particular components of the cryostat and the centrifuge itself.

The goal of the new concept is to minimize the part of the system classified as hazardous zones. Such classification can be avoided in case the following two conditions apply at the same time: a pressure level below 50 mbar under normal operating conditions and a hydrogen concentration below 1 % (25 % of the lower explosion limit) under disturbed conditions. A new setup was developed in order to reduce the complexity of the existing vacuum system, introducing buffer volumes and implementing proper safety routines to withstand the presence of two incidents at once. Doing so, the classifications of hazardous zones could be reduced to areas, where appropriate licenced components were available (e.g. rough vacuum gauges and dry pumps). The system was successfully licensed and commissioned, first experimental results show enhanced system performance.

Keywords: DEMO, Tokamak, pellet fuelling, operational safety

1 Introduction

Nuclear fusion experiments will operate with hydrogen isotopes; hence, hydrogen safety cannot be ignored. Despite nowadays experiments avoid the use of tritium, already complex and demanding radiological licensing issues apply.

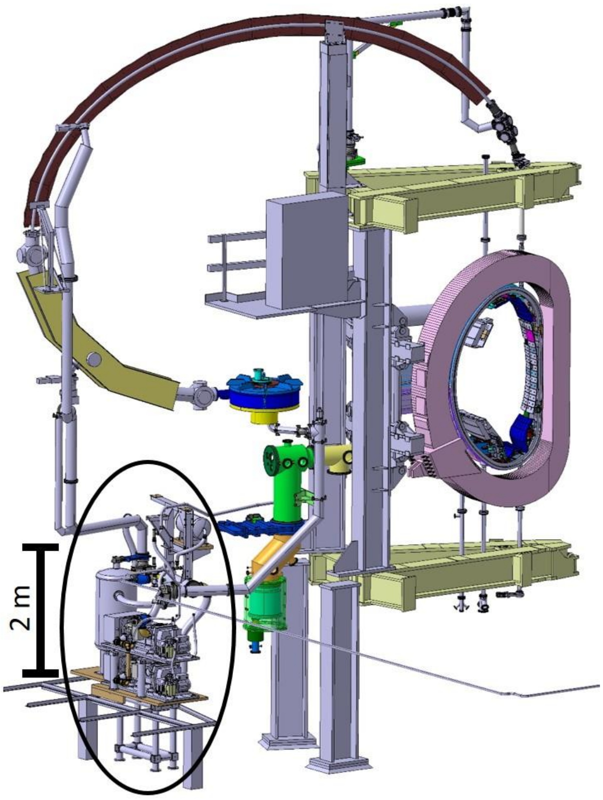

Fig. 1: Pellet launching system located in seg. 5 on ASDEX Upgrade with new vacuum system (indicated).

Failing to meet safety requirements has the potential to hamper operation due to measures by the authorities as well as real incidents. In particular to keep existing systems in line with legal requirements is a challenge, as these requirements may change over the course of the years.

2 ASDEX Upgrade pellet launching system

The pellet source is a batch extruder, providing an ice rod suitable for up to 130 pellets (depending on the pellet size). A solenoid driven cutter punches the pellet out of the ice rod and put it in the stop cylinder of the centrifuge, located close below. The maximum pellet repetition rate is about 83 Hz.

The pellet launcher accelerates pellets to the desired speed. The stop cylinder of the centrifuge ensures that the pellet acceleration starts with no radial speed, hence the final speed scatter is very low. At the exit of the stop cylinder, the pellet enters a groove in the centrifuge arm with no radial speed and is then accelerated to a speed up to 1050 m/s [1].

The accelerated and ejected pellet enters the guiding tube through a funnel. At the end of the looping type guiding tube, the pellet enters the plasma on the magnetic high field side of the Tokamak ASDEX Upgrade [2]. The control system was refurbished in order to provide full remote control using state of the art PLC [3].

The existing vacuum system has four pumping lines, each line equipped with a turbomolecular pump and a rotary vane pump, two of them with an additional roots blower. The exhaust lines of these pumps were combined into one single tube to the main chimney of ASDEX Upgrade. This tube has been installed using a complicated track in order to save space in the torus hall. Many vertical loops were present, avoiding self-reliant

---

author's email: bernhard.ploeckl@ipp.mpg.de

exhaust of hydrogen. Hence, the presence of hydrogen in the exhaust line must be considered.

3 Regulations for hydrogen safety

3.1 ATEX directive (EU)

The explosion prevention is settled in the ATEX directives 1999/92/EC for the workplace and 2014/34/EU for the equipment and protective systems [4, 5].

The workplace directive defines the three basic principles for the explosion prevention, ordered from high priority to low [Article 3]:

- prevention of the formation of explosive atmospheres, or where the nature of the activity does not allow that,
- the avoidance of the ignition of explosive atmospheres, and
- the mitigation of the detrimental effects of an explosion so as to ensure the health and safety of workers.

The employer shall carry out an assessment of explosion risks taking account at least [Article 4]:

- the likelihood that explosive atmospheres will occur and their persistence,
- the likelihood that ignition sources, including electrostatic discharges, will be present and become active and effective,
- the installations, substances used, processes, and their possible interactions,
- the scale of the anticipated effects.

The employer shall classify places, where explosive atmospheres may occur into zones and ensure that the minimum requirements laid down in Annex II are applied to these places [Article 7].

Annex I defines the classification of hazardous places into zones:

A place in which an explosive atmosphere consisting of a mixture with air of flammable substances in the form of gas, vapour or mist is:

Present continuously or for long periods	Zone 0
Likely to occur in normal operation occasionally	Zone 1
Not likely to occur in normal operation but, if it does occur, will persist for a short period only	Zone 2

Article 8 requires the compilation of an explosion protection document demonstrating that explosion risks are determined and assessed. It shall classify the hazardous places into zones and describe adequate explosive protection measures. It has to describe issues related to work safety according to 2009/104/EC.

3.2 National regulation

BetrSichV [6] and GefStoffV [7] are German regulations in order to implement the directive 1999/92/EC into national rules, which is substantiated by technical rules (TRGS 721 [8] et seq.).

These rules define the main parameters of flammable gases and vapours, e.g. the upper and lower explosion limit and the ignition temperature.

The different values of the lower explosion level for protium and deuterium result i.a. from the strong isotope effect due to the different reaction kinetics of the hydrogen-oxygen reaction [9].

The explosion characteristics are normally determined under atmospheric conditions (20 °C, 1013 mbar).

The explosion limits are pressure dependent [10]. For the most flammable gases and vapours, the lower explosion limit rises for pressures below atmospheric pressure. In contrast the lower explosion limit of hydrogen rises for pressures below atmospheric pressure and first descends for pressure under 0,1 bar [11]. The ignition temperature rises for pressures below atmospheric pressure. Considering this, the limits provided in table 1 are regarded to be the most relevant, providing safety for other pressure ranges as well.

	protium (H_2)	deuterium (D_2)
Lower explosion level	4 vol.-%	6,67 vol.-%
Upper explosion level	77 vol.-%	79,6 vol.-%
Ignition temperature	560 °C	560 °C

Table 1 parameters from material safety data sheet.

Furthermore, technical rules describe methods to avoid hazardous explosive atmosphere [12].

4 Concept

The rearrangement of the primary vacuum pumping system was carried out with a strong focus on the explosion prevention issues.

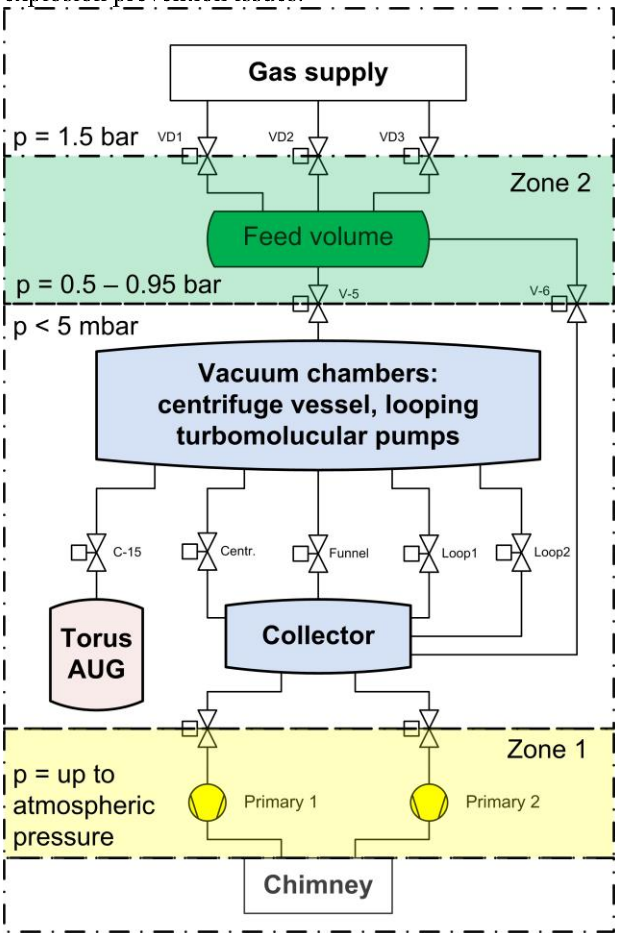

Fig. 2 Block diagram of new vacuum scheme, sorted by pressure range. The first segment (gas supply) is characterised by a pressure up to 1.5 bar (150 kPa). The feed volume is operated at a pressure below

atmospheric pressure 0.5-0-95 bar (50-95 kPa). The vacuum chambers, high vacuum pumps and the collector are operated at a pressure below 5 mbar (0.5 kPa). The last segment compress the gas up to atmospheric pressure.

4.1 Normal operation

Many vacuum equipment like turbo molecular pumps or gauges which contain a potential igniting source are not licenced for use with hydrogen. Custom-made equipment in R&D is usually not licensed for the use in explosive atmosphere as well. In particular, for parts of the cryostat like heaters or temperature gauges no licensed parts are yet at hand suitable for replacement. Hence, there is an issue to use these parts further in non-hazardous zones.

The primary goal is to avoid the need to declare hazardous zones in areas, where components cannot be replaced by explosion-proof equipment (mandatory for classified zones). This goal can be reached by restricting the amount of flammable gases or vapours or by reducing oxygen, e.g. by inerting. Using nitrogen purge gas to avoid explosive atmosphere enforces appropriate control devices to ensure the adequate presence of this gas flow and interlocks has to be implemented in case of partial or full absence of this flow. This can be very complex and costly.

We make use of the fact, that in vacuum vessels with a pressure less than 50 mbar (5 kPa) a hazardous expansion of an explosion is not likely to occur. We collect all hydrogen mass flow in one central pump, ensuring not to exceed the 50 mbar (5 kPa) threshold in the vacuum system. The block diagram [Fig. 2] is sorted by normal operating pressure range.

The compression of the hydrogen up to atmospheric pressure happens in a licensed dry screw pump (Leybold DV650 ATEX). The maximum pumping capacity is 650 m³/h, its base pressure is less $5*10^{-3}$ mbar (0.5 Pa). Due to the fact, that a hazardous area on the atmospheric side of the pump cannot be avoided and further measures like inerting with nitrogen is not forseen, the pump is ex-proofed with the classification (Ex) 2/- G c Ex e IIC T2 Gb.

The hydrogen, compressed to atmospheric pressure, is released to the central exhaust chimney of ASDEX Upgrade torus hall using a continuously ascending exhaust tube.

The continuously ascending plumbing is classified as hazardous zone but as passive device with no active parts, no further measures like e.g. purging with nitrogen are required. Nevertheless, proper grounding and leak tightness of the tube must be demonstrated. Inherent safety avoids the need to survey the presence and functionality of safety measures. This justifies the extra efforts to create this new track.

In gas supply lines, pure hydrogen is present, the absence of oxygen is ensured by leak tight and proven make of it. Hence, the upper explosion level is well exceeded.

4.2 Disturbed operation

Two main cases have to be considered in order to assess disturbed operation conditions: loss of vacuum and loss of electric power.

Loss of vacuum means to vent the vacuum vessel up to atmospheric conditions due to an inflow of air due to a sudden leak e.g. through a broken window of a viewport. In this case, the PLC is still operational, the system remains under control. Valves can be switched and the system can be transferred into a safe state.

Loss of electric energy puts the system immediately out of control of the PLC. Any component will return to its idle state or position. Components with no intrinsic force may stay in an undefined state.

The hydrogen safety assessment takes the occurrence of both incidents at same time as a basis.

4.3 Non classified zones

Under normal operating conditions, (pressure below 50 mbar/5 kPa) solid-state hydrogen must be present in order to build up a significant inventory. In our case, this amount is limited to 1.9 bar*l, using a buffer (feed) volume prior to solidification. The purge process, employed to warm up the hydrogen solid and sublime it will use the same buffer volume but without the solidification process. Hence, an overall maximal inventory of 3.8 bar*l has to be considered for safety assessment.

In case of a loss of vacuum (inflow of air) it cannot be ensured that the pressure stays below 50 mbar (5kPa) and will bring up the vessel to atmospheric pressure; the resulting hydrogen concentration in the vessel shall remain in this case well below the lower limit for explosion at the end of the venting process. In order to meet this requirement, a limit of 1 vol.-% of hydrogen in air is considered sufficient. This provides a safety factor of at least four, since the lower explosion limit in air is 4 vol.-% for protium and 6.7 vol.-% for deuterium respectively [Table 1]. This is known as “concept of limited inventory”.

The vacuum system is separated into two main chambers; each of it shall provide a volume of 380 l in order to ensure a maximum hydrogen concentration of 1 vol.-%. The compliance with this hydrogen inventory limit is essential; hence, a bundle of measures is defined to ensure safety.

- The entrance and exit valves of the feed volume are interlocked when the measured pressure in the vacuum system exceeds 50 mbar/5 kPa, in order to meet the requirement for non-classified zones. The pressure in the vacuum system is monitored by several pressure gauges.
- The buffer volume is protected against over pressurization using a guard gauge, independent of gauge used for filling process control. This makes sure, that the maximum allowed amount of hydrogen (3.8 bar*l) will not be exceeded.
- In order to keep the hydrogen concentration in disturbed conditions sufficiently low, purging is possible in case, cryostat & centrifuge, funnel and looping are connected via open gate valves. The normal procedure to get rid of not used hydrogen ice is to purge with 1.9 bar*l gas of the same species. Usually, the operator has to wait with a re-purge until the pressure in the chamber undergo the 50 mbar (5 kPa) threshold.

In a case of loss of electric energy no further hydrogen can enter the system because the hydrogen supply valves are normally closed spring driven valves. The systems remains in a safe state.

4.4 Classified zones

In classified zones, the use of licensed equipment is mandatory. The proper classification is to be selected referring to the survey, to be made in advance.

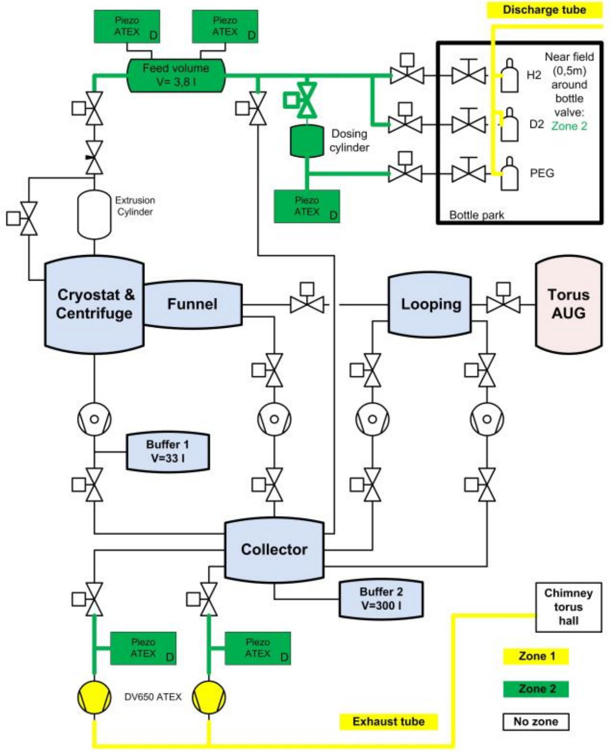

Fig. 3 Block diagram of new system indicating components classified to be hazardous zones: green colour: zone 2, yellow colour zone 1. Beside these zones, no restriction from the explosion prevention is present.

Equipment installed in zone 1 has to fulfil the requirements of category 2 according directive 2014/34/EU and equipment to be used in zone 2 has to fulfil the requirements of category 3.

Most of the used sensors are protected by the type of ignition protection "intrinsic safety". In order to ensure this ignition protection the whole sub system e.g. pressure gauge, its cabling and power supply has to meet the according requirements [13].

In order to provide evidence of intrinsic safety, following conditions must be present:

- Voltage, current and power of the consumer load is higher than the corresponding values of the isolating amplifier and
- The total inductivity and capacity of consumer load and cabling is smaller than those of the source are.

Due to the described classification of hazardous zones, just the pressure transmitters and their amplifiers in the gas supply and primary pumping area must meet the requirements according directive 2014/34/EU.

4.5 Assessment process

The assessment process has been carried out with support from DEKRA Testing and Certification GmbH, a Notified Body on ATEX-Directive and an Inspection Body on BetrSichV for explosion protection. According to BetrSichV, the pellet launching system, as a plant in hazardous areas, needs an inspection by a qualified person.

First step of the inspection is to check the required documents: concept of the explosion protection with the classification of hazardous areas and the explosion protection measures (explosion protection document), block diagrams and interlocks as well as the documentation of the equipment used in hazardous areas, e.g. CE declaration acc. Directive 2014/34/EU, manuals and maintenance instructions. Safety instructions for the system are part of the document review as well.

Next step is to verify the accordance of the installed material with the describing documents and its proper mounting and grounding according to the instructions.

The functional test focuses on check of interlocks and safety routines e.g. protection against over pressurisation.

Furthermore, the BetrSichV [6] defines the requirement to re-assess the explosion concept, the installed equipment and implemented methods on a regular basis.

5 Summary

A hydrogen fuelling system operated since decades had to be retrofitted in order to meet actual safety requirements. The main functional cryogenic equipment is unique (one-of-a-kind); hence, no modifications are possible on these parts. The concept is to declare areas with a pressure below 50 mbar (5 kPa) as non-hazardous zones (under normal operating conditions). For disturbed operation (e.g. loss of electric power) new buffer volumes provide the required safety margin (hydrogen concentration <1%). This opens a way to license this system without replacement of critical components.

The continuous ascending exhaust line provides inherent safe venting of the hydrogen. Furthermore, the new buffer volumes make operation smoother, as pressure burst coming from sublimation of solid hydrogen are smoother due to the added volume.

6 Acknowledgement

This work has been carried out within the framework of the EUROfusion Consortium and has received funding from the Euratom research and training programme 2014-2018 and 2019-2020 under grant agreement No 633053. The views and opinions expressed herein do not necessarily reflect those of the European Commission.

References

[1] C. Andelfinger, E. Buchelt, P. Cierpka, H. Kollotzeck, P. T. Lang, R. S. Lang, G. Prausner, F. X. Söldner, M. Ulrich und G. Weber, „A new centrifuge pellet injector for fusion experiments," *Rev. of Sc. Instr.,* Bd. 64, pp. 983-989, 1993.

[2] P. T. Lang, P. Cirepka, O. Gehre, M. Reich, C. Wittmann, A. Lorenz, D. Frigione, S. Kalvin, G.

Kocsis, ASDEX Upgrade Team und S. Maruyama, „A system for cryogenic hydrogen pellet high speed inboard launch,“ *Rev. of Sci. Instr.,* Bd. 74, pp. 3974-3983, 2003.

[3] B. Ploeckl und P. T. Lang, „The enhanced ASDEX Upgrade pellet centrifuge launcher,“ *Rev. of Sci. Instr.,* Bd. 84, p. 103509, 2013.

[4] D. 1999/92/EC, *Minimum requirements for improving the safety and health protection of workers potentially at risk from explosive atmosphere,* 1999.

[5] D. 2014/34/EU, *harmonisation of the laws of the Member States relating to equipment and protective systems intended for use in potentially explosive atmospheres (recast),* 2014.

[6] „Betriebssicherheitsverordnung,“ *BGBl.,* p. 554, 30 Apr. 2019.

[7] „Gefahrstoffverordnung (GefStoffV),“ *BGBl.,* p. 626, 29 Mar. 2017.

[8] „TRBS 2152 Teil 1 (TRGS 721) Gefährliche explosionsfähige Atmosphäre“.*BAnz. Nr. 103a; BArbBl. 8/9-2006, S. 40 ff.*.

[9] S. C. Kurzius und M. Boudart, „Kinetics of the Branching Step in the Hydrogen-Oxygen Reaction,“ *Combustion and Flame,* Bd. 12, Nr. 5, pp. 477-491, 1968.

[10] W. G. Graham und L. Ruby, „Cryopump measurements relating to safety, pumping speed, and radiation outgassing,“ *J. Vac. Sci. Technol.,* Bd. 16, Nr. 3, May 1979.

[11] W. Hirsch und E. Brandes, „Sicherheitstechnische Kenngrössen bei nichtatmosphärischen Bedingungen,“ Physikalisch-Technische Bundesanstalt„ Braunschweig, 2014.

[12] „TRBS 2152 Teil 2 (TRGS722) Vermeidung oder Einschränkung gefährlicher explosionsfähiger Atmosphäre,“ *GMBI 2012,* Bd. 22, pp. 398-410, 2012.

[13] IEC 60079-14:2013, „Explosive atmospheres - Part 14: Electrical installations design, selection and erection“.*Internatioal Electrotechnical Commission.*